Modular Table - Medium

23.6 x 31.5" / 60 x 80 cm

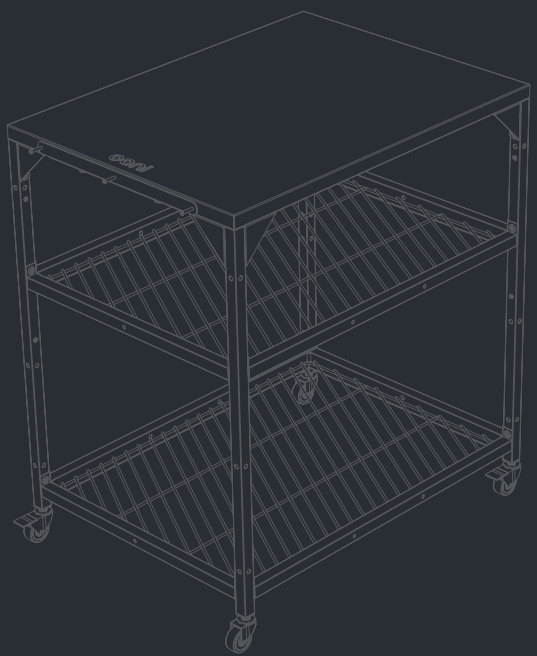

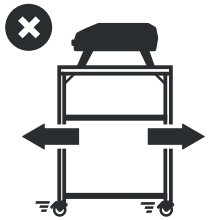
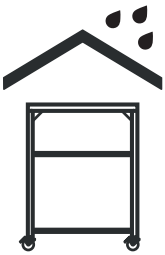
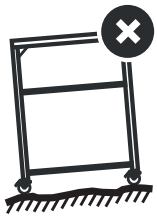
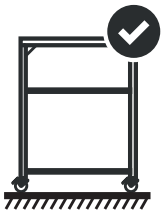
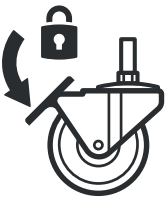
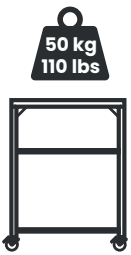
50 kg
110 lbs
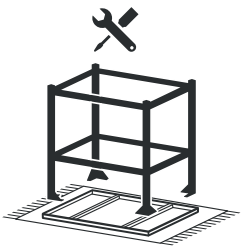

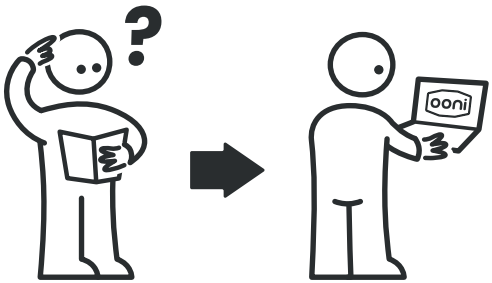

(a) x1

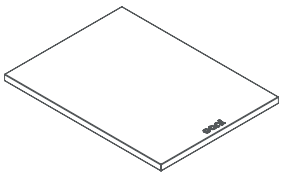

(b) x2

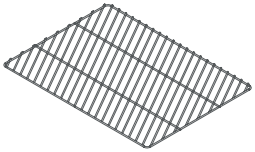

(c) x2

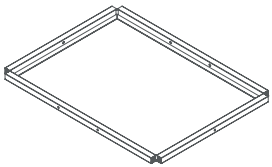

(d) x4

(e) x1

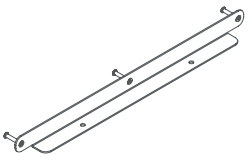

(f) x2

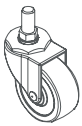

(g) x2

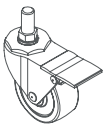

(h) x8

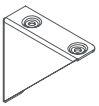

(i) x8

(j) x2

(k) x48

(l) x16

x1

x1

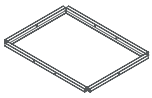

c x2

l x16

i x8

x2 1

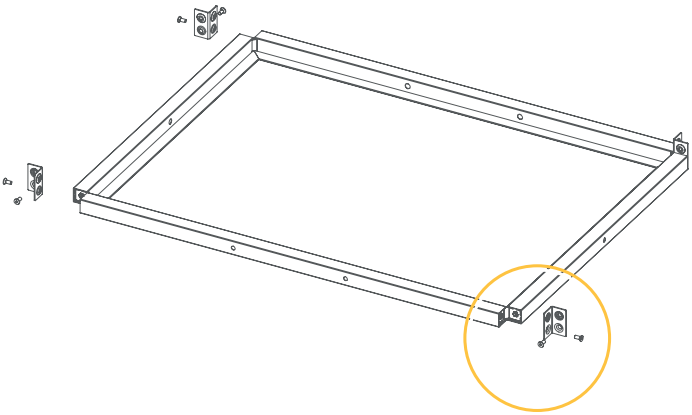

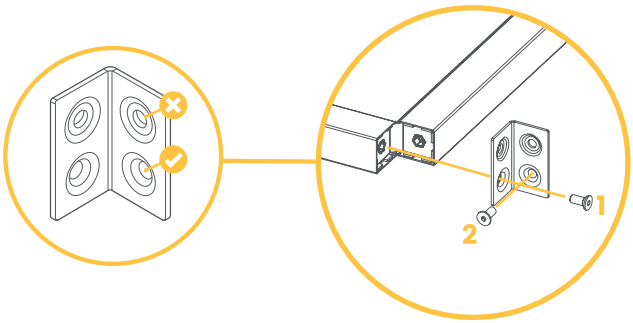

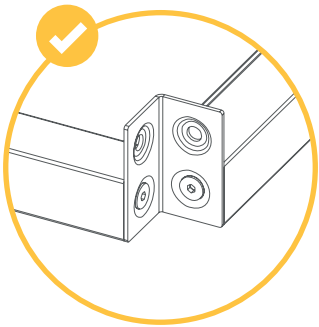

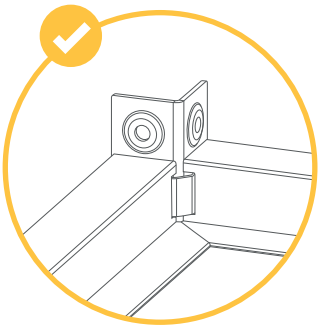

100%

d x4

h x8

k x16

x4 2

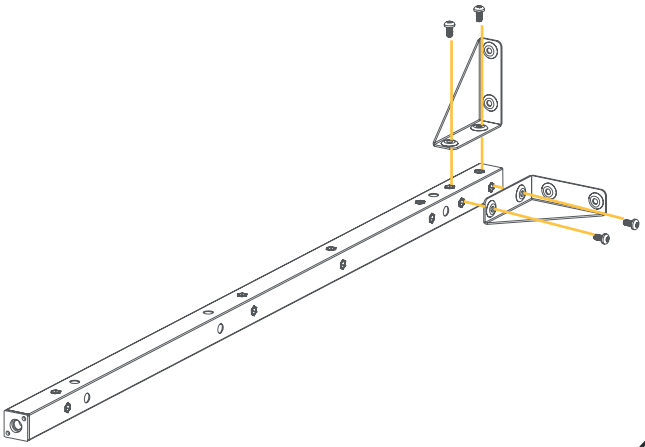

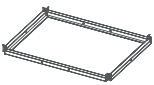

1 x1

2 x2

k x4

3

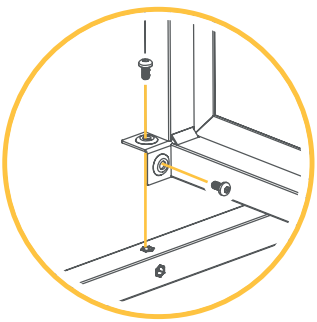

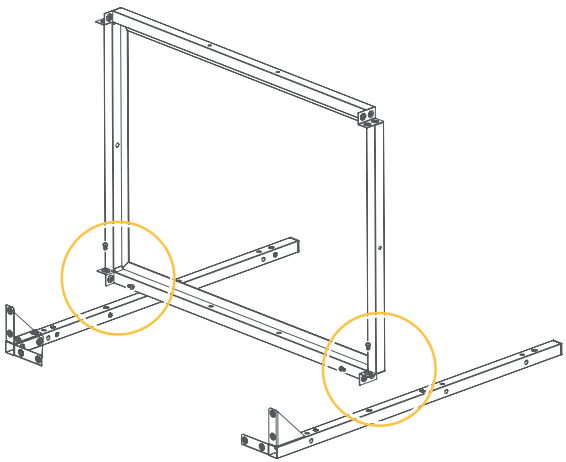

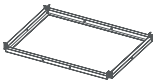

1 x1

k x4

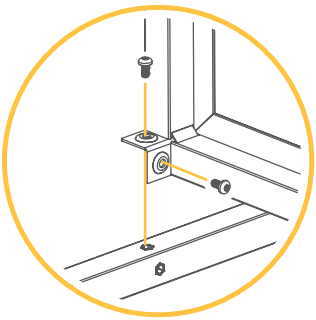

4

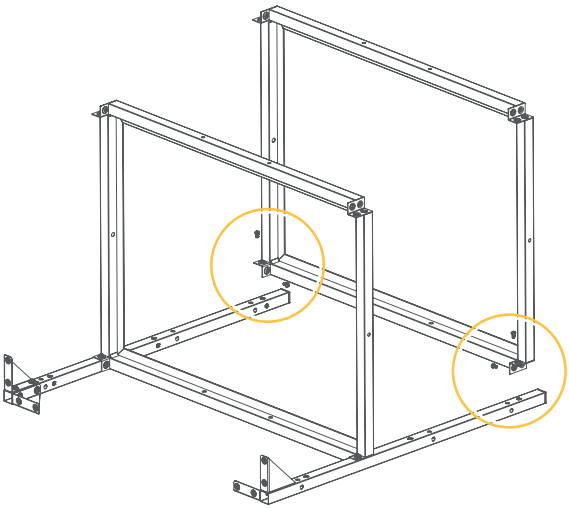

2 x2

k x8

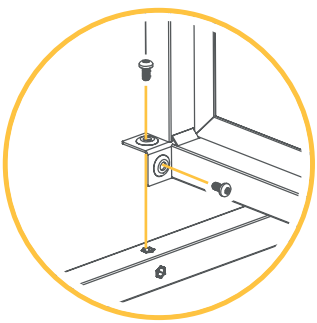

5

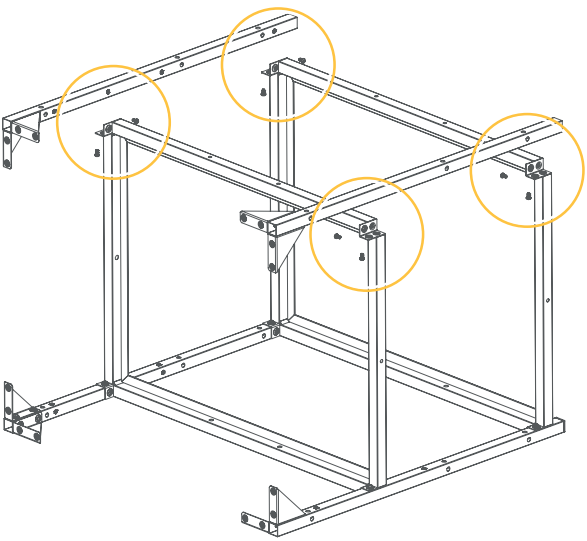

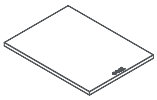

a x1

k x16

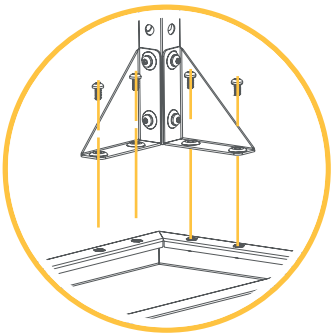

6

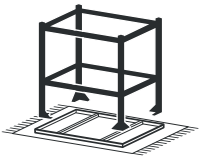

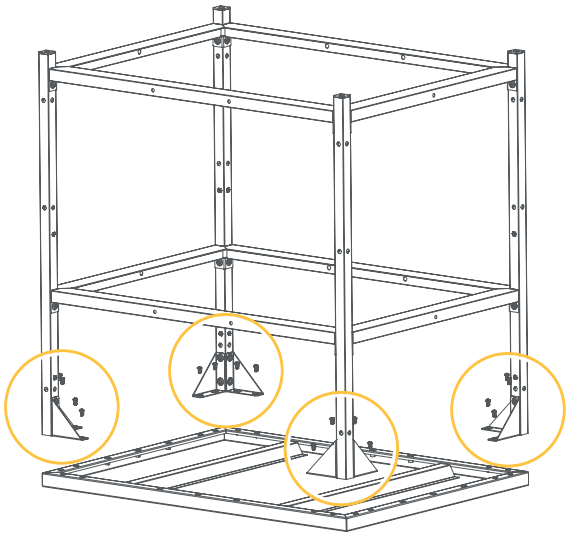

f x2

g x2

7

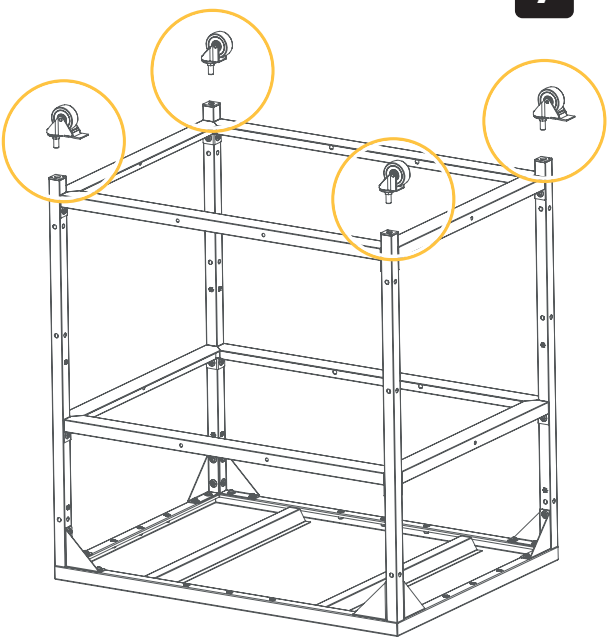

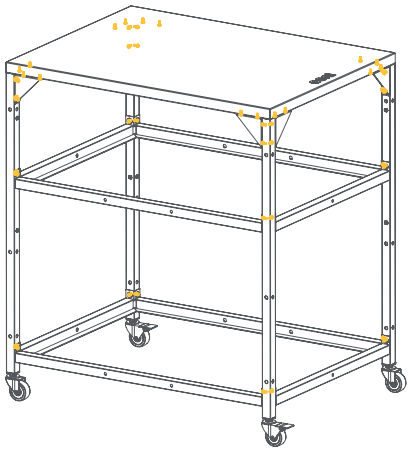

8

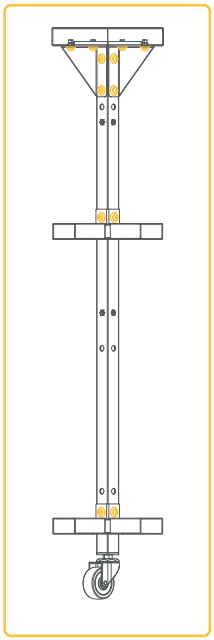

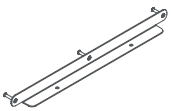

e x1

j x2

9

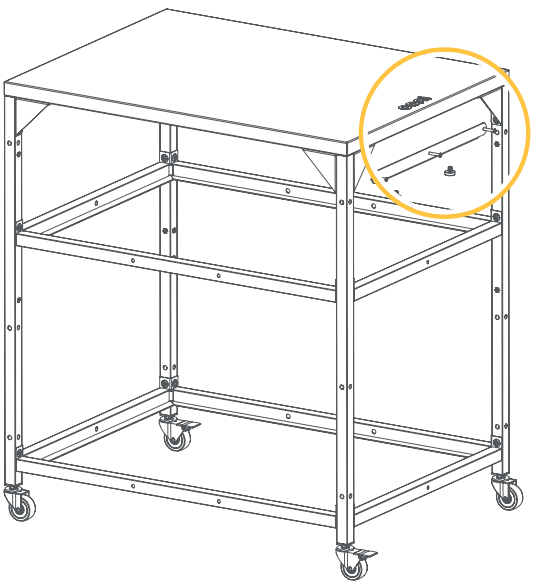

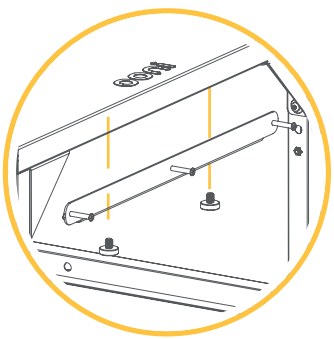

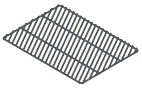

b x2

10

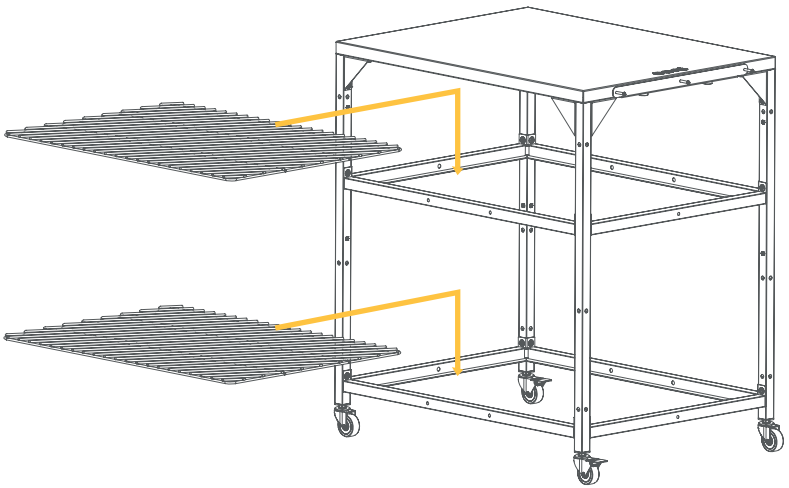

PR230622_PAC0062 Modular Tables V1.5_Product-Medium.indd 11 21/03/2024 13:42

PR230622_PAC0062 Modular Tables V1.5_Product-Medium.indd 12 21/03/2024 13:42